MATERIALS OF CONSTRUCTION: 316L STAINLESS STEEL
SWIVEL JOINT SEALS: FDA NITRILE

PRODUCT:	CORN SYRUP
ESTIMATED WEIGHT OF LOADING ARM:	210 LBS
ESTIMATED MOMENT LOAD AT SPRING:	5900 IN-LBS
ESTIMATED MOMENT LOAD AT INLET:	SAME
FLANGE GASKETS:	KLINGER SIL C5400
TEST PRESSURE:	90 PSI

LOADING ARM NOT DESIGNED FOR PRODUCT RETENTION OR ADDITIONAL WEIGHT BY OTHERS

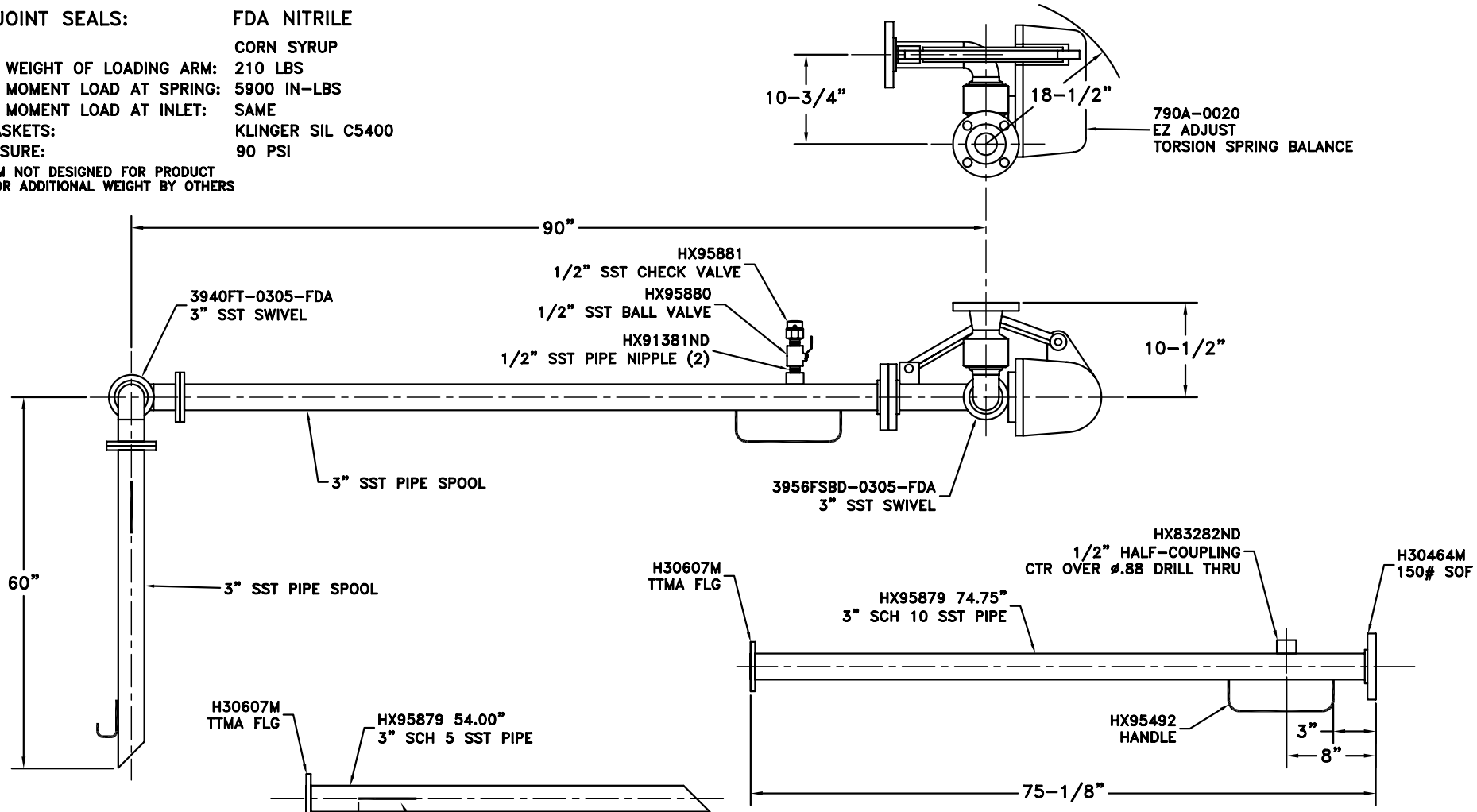

H30315M	4	BOLT
H06092M	4	NUT
H08979M	4	WASHER
H04189M	1	GASKET
H30491M	16	BOLT
H30534M	16	NUT
H30489M	16	WASHER
C03310M	2	GASKET
H02209PA	1	INSTRUCTION SHEET
H30446M	1	ALUM NAME PLATE
H30447M	2	SST TIE BANDS

OPERATION	A	B	C	D
WELD				
MACHINE				
ASS'Y & TEST				
ASS'Y ONLY				
TEST ONLY				
PAINT				

1. HIGHLIGHT REQ'D OPERATIONS PER ASS'Y.
2. RECORD CLOCK NO. WHEN COMPLETE.

3" J33F-G235

OPW Engineered Systems
www.opw-es.com

DRAWN BY: BJB
SCALE: NONE
CHECKED BY:
DATE: 2/27/08
QUOTE NO.
DRAWING NO.