MATERIALS OF CONSTRUCTION: CARBON STEEL & ALUMINUM
SWIVEL JOINT SEALS: VITON GFLT

PRODUCT:	BIODIESEL & ETHANOL
ESTIMATED WEIGHT OF LOADING ARM:	175 LBS
ESTIMATED MOMENT LOAD AT SPRING:	2800 IN-LBS
ESTIMATED MOMENT LOAD AT INLET:	SAME
FLANGE GASKETS:	KLINGER SIL C5400
TEST PRESSURE:	90 PSI

LOADING ARM NOT DESIGNED FOR PRODUCT RETENTION OR ADDITIONAL WEIGHT BY OTHERS

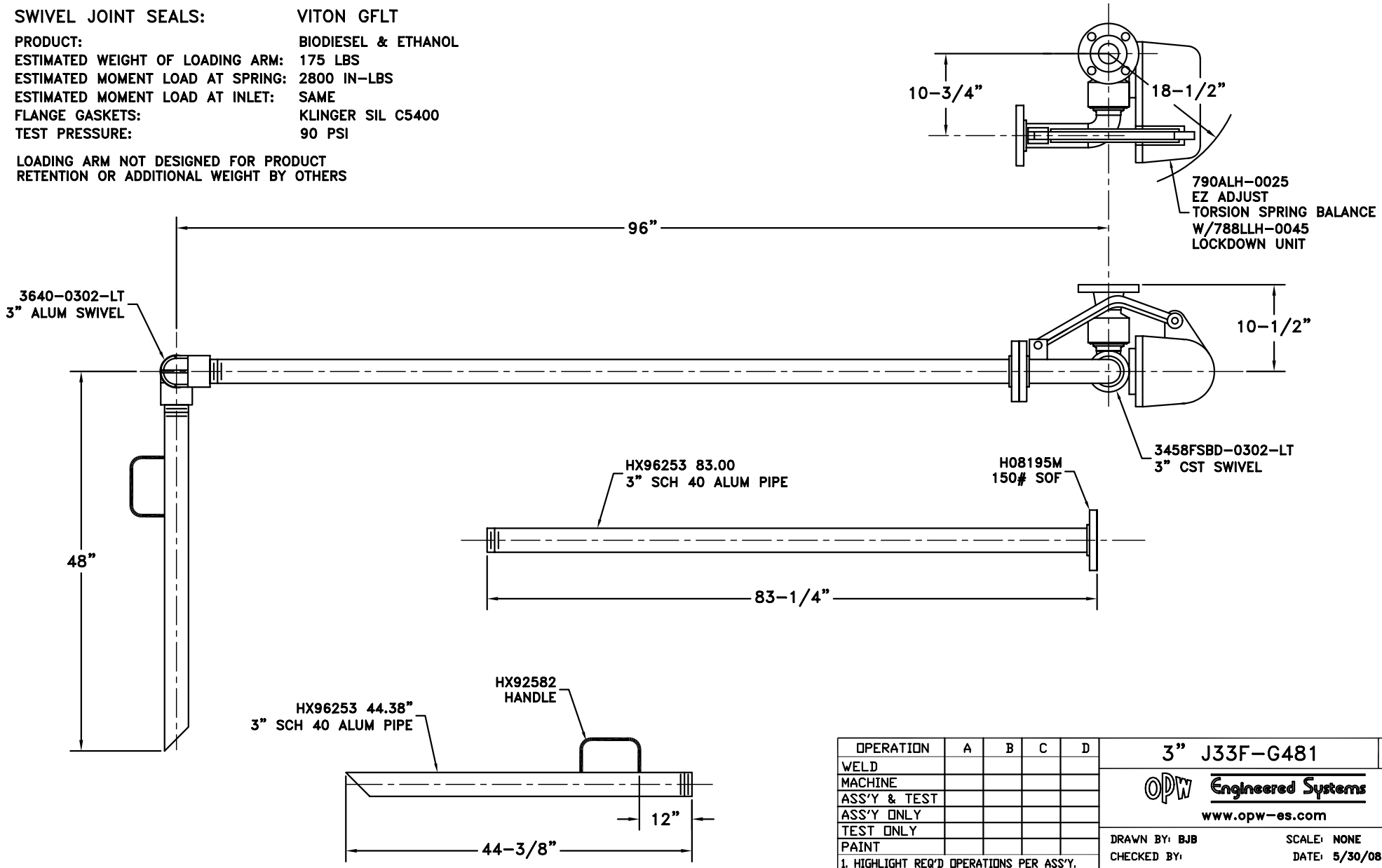

OPERATION	A	B	C	D
WELD				
MACHINE				
ASS'Y & TEST				
ASS'Y ONLY				
TEST ONLY				
PAINT				

1. HIGHLIGHT REQ'D OPERATIONS PER ASS'Y.
2. RECORD CLOCK NO. WHEN COMPLETE.

3" J33F-G481 L.H.

OPW Engineered Systems
www.opw-es.com

DRAWN BY: BJB
CHECKED BY:
QUOTE NO. 18998
SCALE: NONE
DATE: 5/30/08
DRAWING NO.