MATERIAL:
CARBON STEEL / ALUMINUM CONSTRUCTION
VITON SWIVEL JOINT SEALS

OPW Engineered Systems
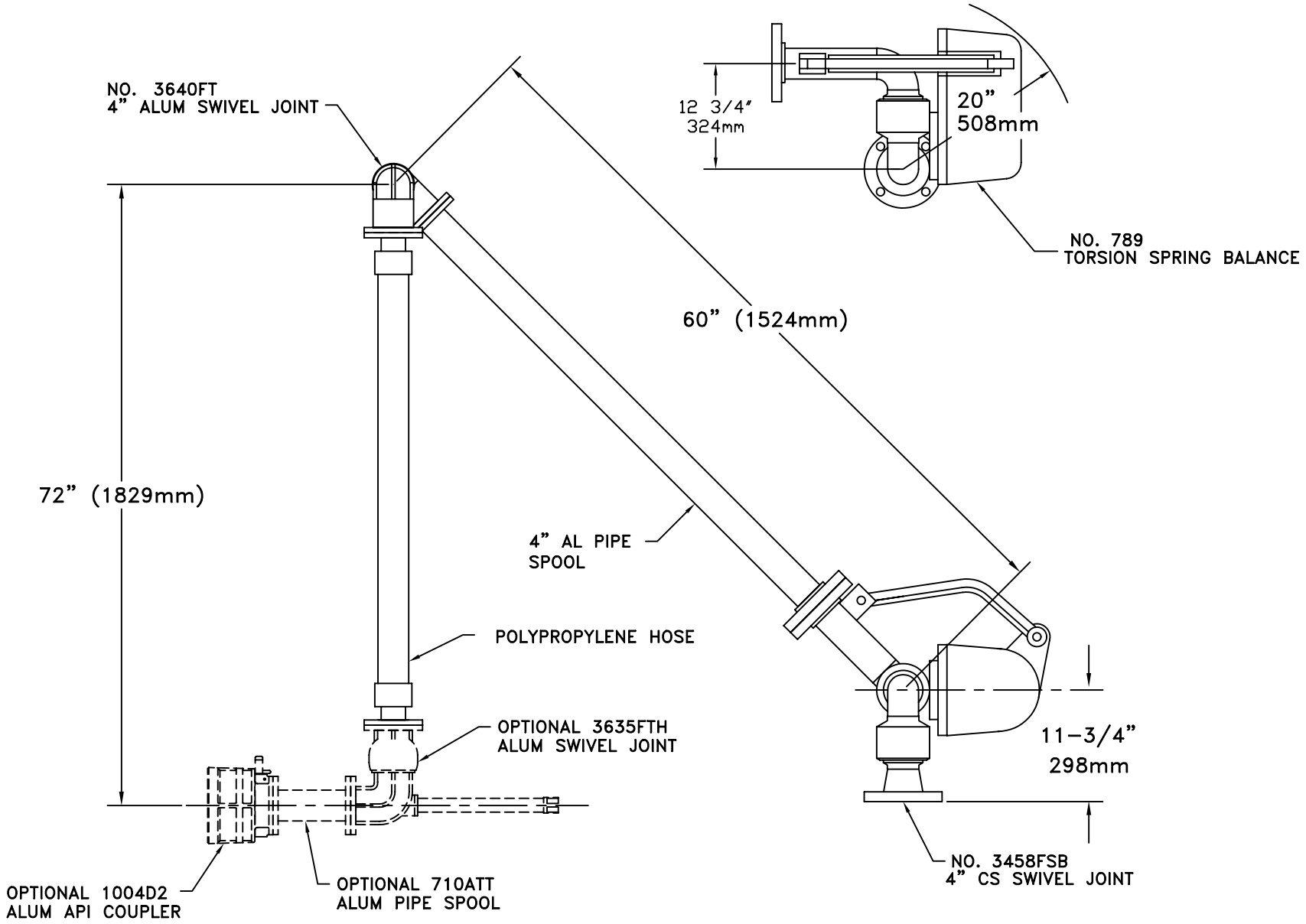
4" OPW AFH32F LIQUID LOADER