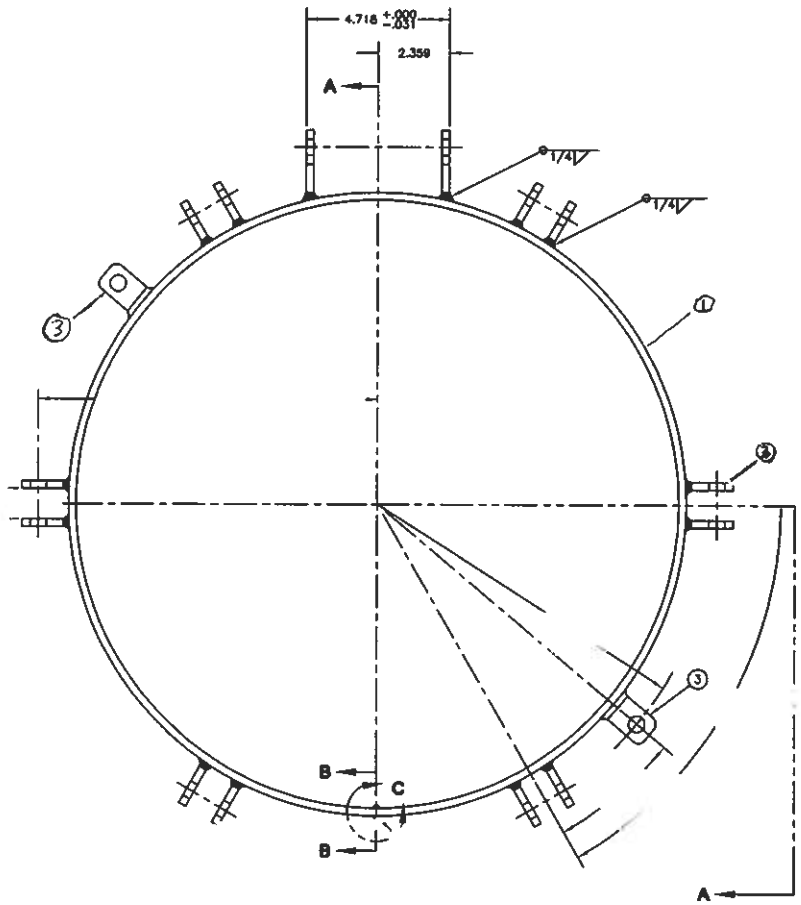

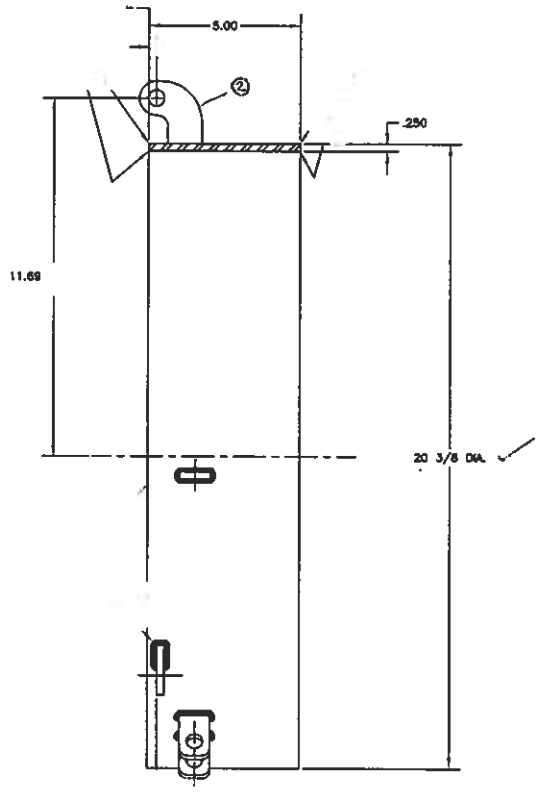

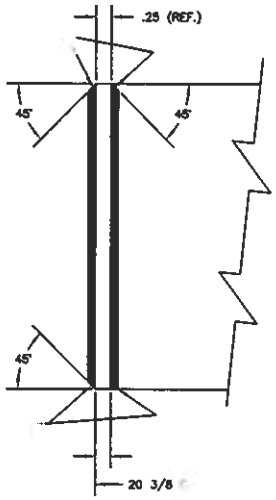

SECTION B-B
FULL SCALE

NOTE 5:

(5) MATERIAL:
ITEM (1): 304L S.S.
ITEM (2): 304 S.S.
ITEM (3): 304 S.S.

ITEM	PART NO	DESCRIPTION	REQ'D
3	1050	CLAMP BRACKET (304 S.S.)	14
2	1369	HINGE BRACKET (304 S.S.)	2
1	1944	FLAT STRIP (304L S.S.)	1

ITEM	DWG. NO.	REQ'D
NEXT ASSY.		

MATERIAL SEE NOTE (5)
TOLERANCE UNLESS OTHERWISE SPECIFIED
SURFACE FINISH 63 μin.
FRACTIONAL ± 1/16
DECIMAL .XX ± .030 .XXX ± .010
ANGLE ± 1°
DIR BY
APPD BY

KNAPPCO
4304 MATROX ROAD
KANSAS CITY, MISSOURI 64130

TITLE WELD RING ASSEMBLY

DATE 11/20/91
DWN
SCALE 1=2
NO. 4300